envisionmachines.com

ENVISION

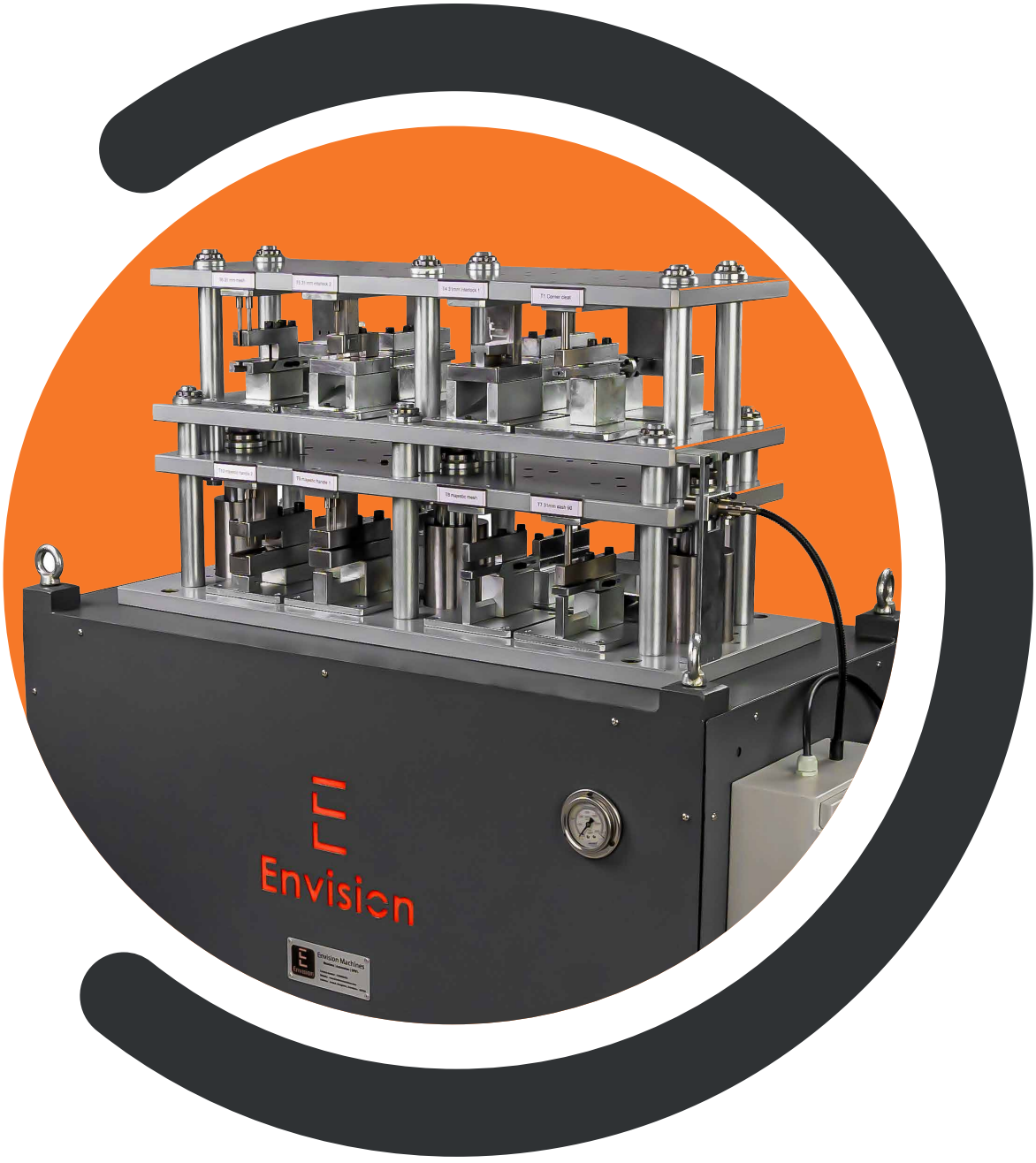

Specializes in Aluminium Punching machines &
Advance tools for doors and windows

Envision Machines

Envision Machines

Innovative Solutions for Aluminium Profile Punching

At **Envision Machines,** we specialize in designing and building cutting-edge **aluminium punching** machines and **advanced tooling solutions** for the window and door manufacturing industry. With over two years of experience, we provide reliable, high-performance machines and tools tailored to your needs.

Our Expertise

- **Advanced Aluminium Punching Machines:** From single-station pneumatic to hydraulic multi-station systems, we offer a range of machines for efficient, precise aluminium profile punching.
- **Custom Tools for Every Requirement:** Over 150+ different tools developed to work with a wide range of aluminium profile brands such as **schuco, Prominance, Aluking, Alupure, Vitco, Technal, Jindal, Hindalco and more.** We ensure your production runs smoothly with custom solutions that meet your exact needs.

Key Achievements

700+
Machines Delivered

We have successfully delivered our machines to clients across India and abroad, ensuring reliable operations worldwide.



Over
2500+
Tools

We have provided over 2500 specialized tools, ensuring our customers have the flexibility to handle various aluminium profile requirements with precision.

Interlock
Punching Machine



1 Station Pneumatic Aluminium
Punching Machine



1 Station Hydraulic Aluminium
Punching Machine



4 Station Hydraulic Aluminium
Punching Machine



8 Station Hydraulic Aluminium
Punching Machine



16 Station Hydraulic Aluminium
Punching Machine



Reinforcement Steel
Punching Machine



Interlock punching machine

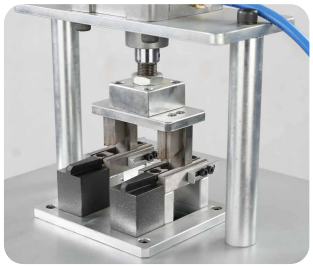

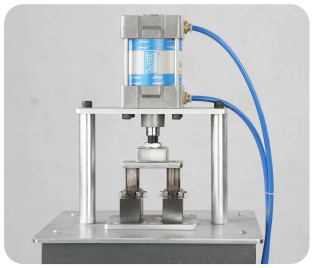



Key Features

- **Easy Guiding System:** Ensures accurate positioning of profiles.
- **Adjustable Cutting Depth:** Punch cutout depth can be adjusted
- Supports punching with or without interlock ribs.
- Adaptable to one-tool or multi-tool setups based on customer needs.

Specifications

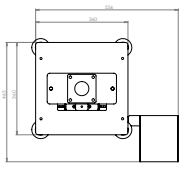

Machine Size	Compresed Air	Profile thickness	Operating Pressure	Cylinder Output Force	Machine weight
400 x 400 x 1200 mm (LxBxH)	UPVC profiles	2-5 mm	7–8 bar	300 kg	30 kg

We have pre-developed tools for leading UPVC profiles, compatible with brands like Prominance, Encraft, Aluplast, Deceuninck, Veka, Simta, Gealan, Kommerling, and Salamander.

1 station pneumatic aluminium punching machine

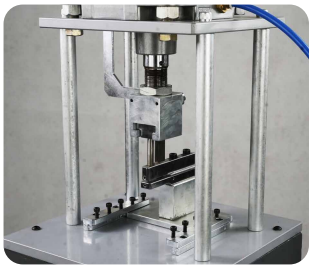

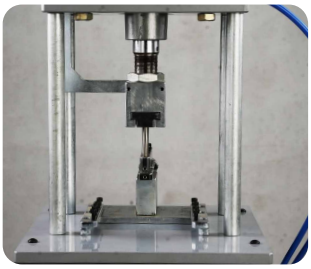



Key Features

- **Easy Guiding System:** Ensures accurate positioning of profiles.
- **Adjustable Cutting Depth:** Punch cutout depth can be adjusted
- Supports punching with or without interlock ribs.
- Adaptable to one-tool or multi-tool setups based on customer needs.

Specifications

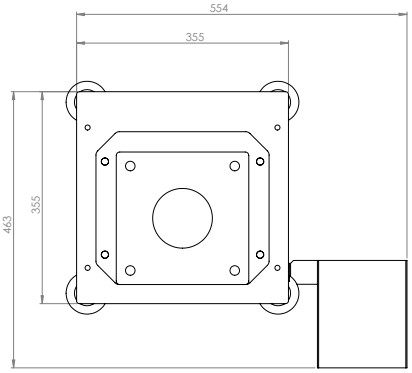

Machine Size	Compresed Air	Profile thickness
400 x 400 x 1200 mm (LxBxH)	Domal/Aluminium profiles	1.8 mm

Operating Pressure	Cylinder Output Force	Machine weight
8–10 bar	1.8 Ton	50 Kg

1 station hydraulic aluminium punching machine

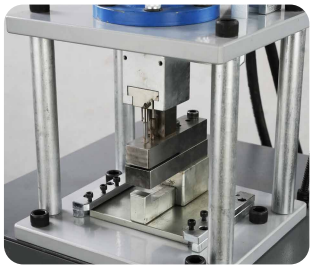

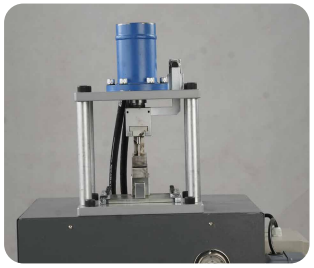



Key Features

- **Single-Die Changeover Mechanism:** Seamlessly swap multiple dies for varied punching needs.
- **High Capacity:** Handles up to 5 tons of punching force.
- **Robust and Stable Design:** Built for durability and precision.
- Ideal for precise and high-speed punching tasks

Specifications

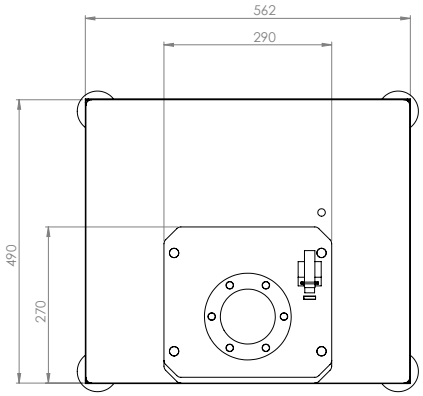

Machine Size	Input	Profile thickness
500 x 500 x 1200 mm (LxBxH)	3 Phase (2HP)	3-4 mm

Operating Pressure	Cylinder Output Force	Machine weight
140–160 bar	5 Ton	160 Kg

4 station hydraulic aluminium punching machine



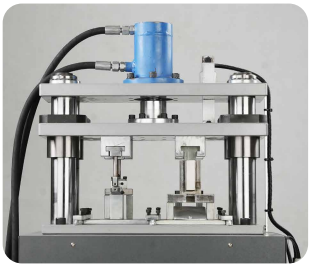



Key Features

- **Multi-Tool Support with quick change over:** Reduces setting time with four tools available at once.
- **Robust Build:** Ensures stability and durability for heavy-duty applications.
- **High Punching Speed:** Delivers consistent and precise results.

Specifications

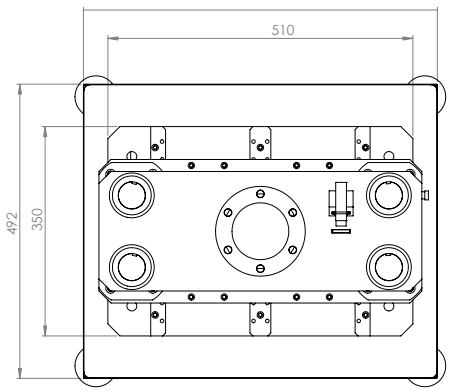

Machine Size	Input	Profile thickness
600 x 500 x 1200 mm (LxBxH)	3 Phase (2 HP)	3-4 mm

Operating Pressure	Cylinder Output Force	Machine weight
140–160 bar	7 Ton	250 Kg

8 station hydraulic aluminium punching machine







Key Features

- **Multi-Tool Capability:** Eight fixed tools reduce tool change time and enhance workflow efficiency.
- **Robust and Stable Build:** Handles demanding applications with reliability.
- **High Productivity:** Designed for fast and consistent punching operations.

Specifications

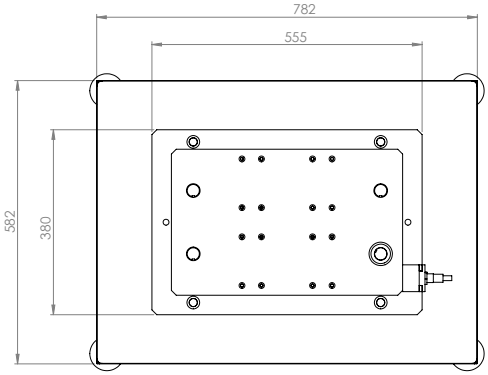

Machine Size	Input	Profile thickness
800 x 500 x 1200 mm (LxBxH)	3 phase (3HP)	3-4 mm

Operating Pressure	Cylinder Output Force	Machine weight
140–160 bar	8 Ton	350 Kg

16 station hydraulic aluminium punching machine



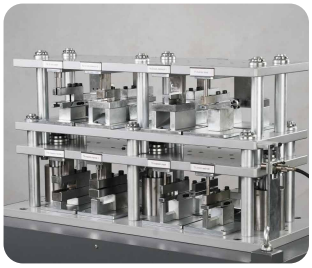

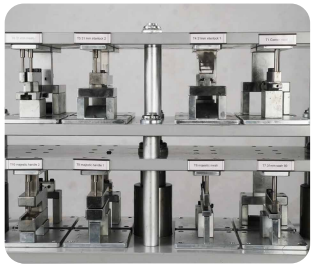

Key Features

- **Multi-Tool Capability:** 16 fixed tools streamline operations and reduce downtime.
- **Stability and Durability:** Robust construction for consistent performance.
- **Enhanced Productivity:** Faster punching speed with seamless workflow integration.

Specifications

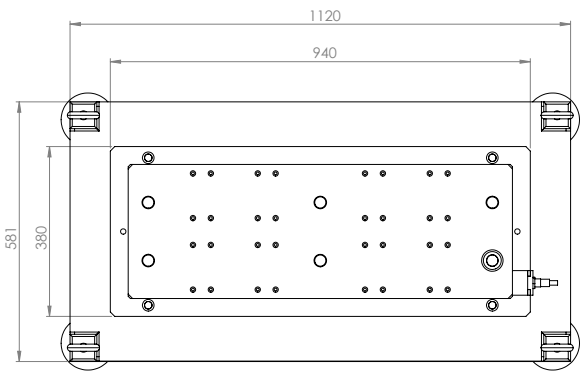

Machine Size	Input	Profile thickness
1000 x 500 x 1200 mm (LxBxH)	3 Phase (3 HP)	3-4 mm

Operating Pressure	Cylinder Output Force	Machine weight
140–160 bar	12 Ton	600 Kg

Sample Punch Tools

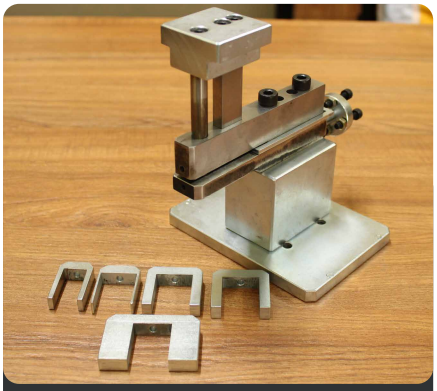

Corner Cleat Tool



Al Interlock Tool

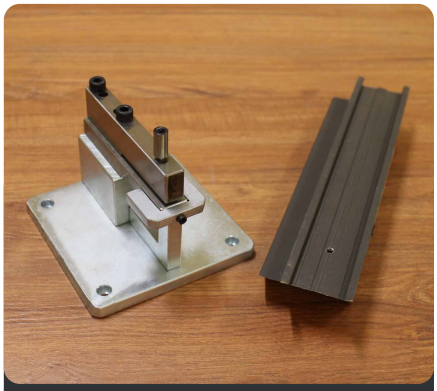

Single Hole

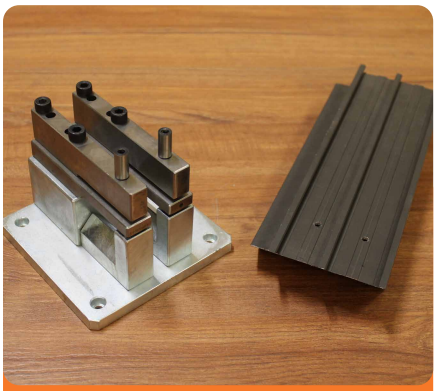

Double Hole

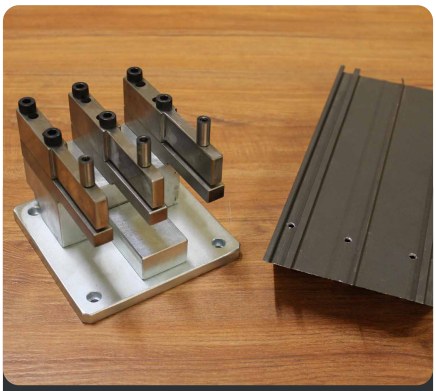

Tripple Hole



Slim Interlock Rib



Slim Interlock 2l



Shutter Front



Shutter Back

Sample Punch Tools



Shutter Rib



Polymide

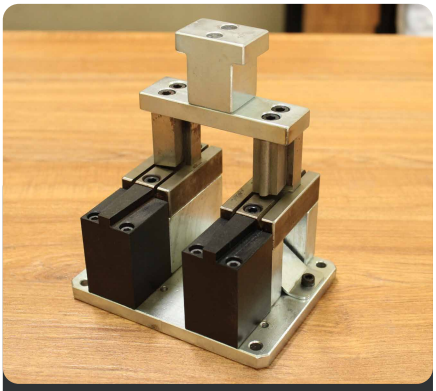

UPVC Interlock

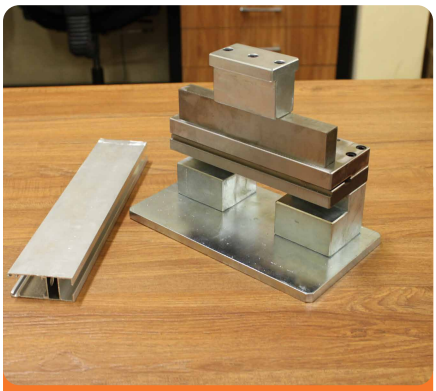

Lock Hole

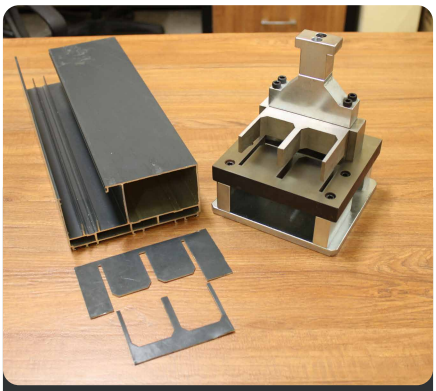

Profile Technal



Custom Corner Cleat



Custom Single Hole

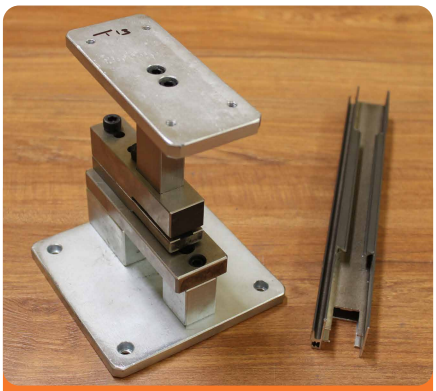

Double Layer Cutting



3d Rib Cutting

To Simplify your fabrication,
contact us today..

ENVISION

Punching machine | Punching tools

#4/6, Hosur Rd, Opp. to Veterinary Hosptial,
Anekal, Bangalore Karnataka 562106

+91 810 503 5162 envisionanekal@gmail.com

www.envisionmachines.com